Diritti riservati All rights reserved

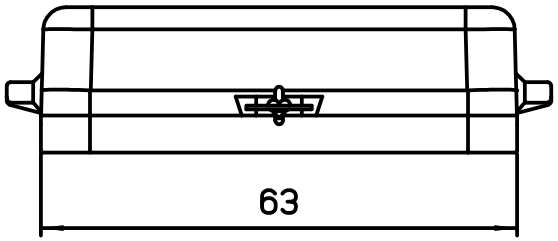

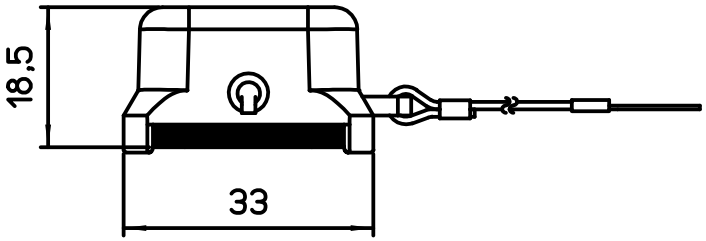

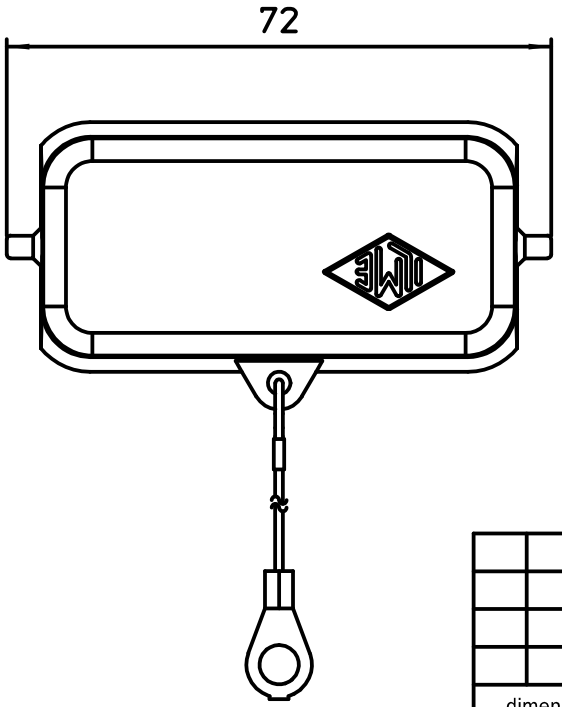

dimensions in mm	CZC 15 L	Scale	
Date 01/07/19	Cover with pegs and gasket	1:1	
Sign. D.Cominelli			